Quick couplings protection plugs, ATR-FF (ISO 16028) type
Tappo di protezione per attacchi rapidi TIPO ATR-FF (ISO 16028)

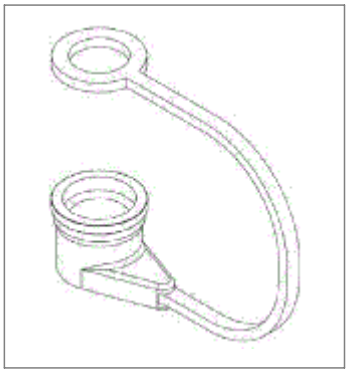

MALE CAP / CAPPUCCIO MASCHIO			
DN	**Code / Codice**	**Color / Colore**	**Material / Materiale**
06	**34S011DN06PC000**	Red / Rosso	PVC
10	**34S011DN10PC000**	Red / Rosso	PVC
13	**34S011DN13PC000**	Red / Rosso	PVC
20	**34S011DN20PC000**	Red / Rosso	PVC
25	**34S011DN25PC000**	Red / Rosso	PVC
32	**34S011DN32PC000**	Red / Rosso	PVC
40	**34S011DN40PC000**	Red / Rosso	PVC
50	**34S011DN50PC000**	Red / Rosso	PVC

FEMALE CAP / CAPPUCCIO FEMMINA			
DN	**Code / Codice**	**Color / Colore**	**Material / Materiale**
06	**34S021DN06PC000**	Red / Rosso	PVC
10	**34S021DN10PC000**	Red / Rosso	PVC
13	**34S021DN13PC000**	Red / Rosso	PVC
20	**34S021DN20PC000**	Red / Rosso	PVC
25	**34S021DN25PC000**	Red / Rosso	PVC
32	**34S021DN32PC000**	Red / Rosso	PVC
40	**34S021DN40PC000**	Red / Rosso	PVC
50	**34S021DN50PC000**	Red / Rosso	PVC

How to order / Come ordinare

34-S-*-1-**-**-000**

- S = Flat face (ISO 16028) — Versions / Versioni
- 01 = Plug / Tappo; 02 = Cap / Cappuccio — Protection type / Tipo di protezione
- 1 = Red / Rosso (Std.) — Colore / Color
- Material / Materiale: PC = PVC
- Size / Grandezza: DN06, DN10, DN13, DN20, DN25, DN32, DN40, DN50

* On request versions: Please, contact our customer service.
* Versioni su richiesta: Per cortesia contattare il ns. servizio clienti.

© Gumec S.r.l. - www.gumec.com